An Addendum to the Science Instrument Concept Study Report

A High-Efficiency, Wide-Band, Multi-Object, Near-Infrared Spectrograph for the NGST

November 2, 1999

Principal Investigator

Dr. S. Harvey Moseley
Code 685
Goddard Space Flight Center
Greenbelt, MD 20771
301-286-2347
301-286-1617 (FAX)
moseley@stars.gsfc.nasa.gov

Co-Investigators

Dr. Bruce E. Woodgate, GSFC
Dr. Randy A. Kimble, GSFC
Dr. Charles W. Bowers, GSFC
Dr. Alexander S. Kutyrev,GSFC/Raytheon ITSS
Dr. Rainer K. Fettig, GSFC/Raytheon ITSS
Dr. Jonathan P. Gardner, GSFC
Dr. Harry I. Teplitz, GSFC/NOAO
Dr. Eliot M. Malumuth, GSFC/Raytheon ITSS
Dr. Johnathan L. Kuhn, GSFC
Richard P. Wesenberg, GSFC
J. Eric Mentzell, GSFC

ISAL Team

Deborah A. Amato, GSFC
William L. Hayden, GSFC
Randy A. Kimble, GSFC
Jon F. Lawrence, GSFC
Judith L. Mann, Swales
Mark A. McGinnis, GSFC
J. Eric Mentzell, GSFC
S. Harvey Moseley, GSFC
Keith A. Parrish, GSFC
David S. Schwinger, GSFC
Shaun R. Thompson, GSFC
Richard P. Wesenberg, GSFC
Robert Williams, APL
Bruce E. Woodgate, GSFC

Contents

1 Introduction **1**
1.1 Assumptions . . . 1
1.2 ISIM Interface Issues . . . 2

2 Technical Description **2**
2.1 Optical . . . 2
2.2 Packaging . . . 3
2.3 Thermal . . . 4
2.4 Electronics . . . 5
2.5 Software . . . 6
2.6 Integration and Test . . . 7
2.7 High Spectral Resolution with High Sensitivity . . . 7
2.8 Multiplex Imaging Using the Microshutters . . . 8

3 Cost Estimate **8**
3.1 Schedule . . . 8
3.2 Cost Summary . . . 8
3.3 Details . . . 9
3.3.1 Management . . . 10
3.3.2 Science Program Development . . . 10
3.3.3 Systems Engineering . . . 10
3.3.4 SR&QA . . . 11
3.3.5 Structure . . . 11
3.3.6 Optics . . . 11
3.3.7 Electronics . . . 11
3.3.8 Thermal Engineering . . . 12
3.3.9 Software . . . 12
3.3.10 Detectors . . . 12

List of Figures

1 MOS Optical Ray trace 3
2 MOS mechanical packaging 4
3 MOS integrated to “yardstick” ISIM 5
4 Electronics Block Diagram 6
5 Integration and test flow 7
6 Labor distribution by month 11
7 Monthly burn rate 12

List of Tables

1 Program Milestones 9
2 Estimated Total Cost, Grassroots, and RAO 9
3 Costs distributed by phase 10

1 Introduction

We submit this report to provide a cost estimate for the development of a complete transmissive microshutter based Multi-Object Spectrograph(MOS) in concert with our science instrument concept report of September 1999. The September report contained only the cost for the technology development of the transmissive microshutter component.

This report is based upon a three week study effort conducted by the Instrument Synthesis and Analysis Laboratory(ISAL) at Goddard Space Flight Center; the team included the PI, several Co-I's, system engineer, and specialists in optics, structures, mechanisms, thermal design and analysis, and electronics. Two cost estimates are provided; a grassroots cost estimate generated by the ISAL team and a cost generated by the Resource Analysis Office(RAO).

1.1 Assumptions

The concept design and estimate assume the following:

- All MOS data processing are be handled by MOS specific electronics. If the NGST C&DH can handle the autonomous MOS targeting processing, MOS specific electronics can be reduced.
- The MOS structure and optics are made of aluminum and kinematic mounts are used to mount the MOS to the ISIM. Thermal gradients should be less that 1 K across the instrument, so the MOS is essentially isothermal.
- All optics and mechanisms have at least one thermal sensor. The filter wheel has a heater.
- Mechanisms have a very low duty cycle and require no power to maintain position while not moving. They are strapped to minimize cool down time after actuation.
- The 4k x4k detectors, detector cold and warm electronics will be provided, GFE, by the NGST project.
- The "Yardstick" ISIM interface is assumed.
- Standard lossless data compression would be provided by the spacecraft as part of the communications protocol.
- If MOS pick-off mirror can be placed slightly ahead of the OTA field mirror minimizing focal surface curvature, the radius of curvature of the focal surface impinging on the transmissive microshutter would then be about 2.2 meters. We can then forgo a 3 mirror Offner relay before the microshutter.

1.2 ISIM Interface Issues

Mass The MOS mass is 173 kgs, not including the warm side electronics. The mass of the warm side electronics and cable is about 2.3 kgs.

Cold Side Power Detectors dissipate 18 mWs, and the microshutter about 1 mW. The filter wheel dissipation is negligible.

Warm Side Power 10.6 Watts

Volume 1.64 m^2

Dimensions 1900 by 900 mm with a cut-out of 500 by 350 mm. The height of the instrument is 640 mm. A secondary optical bench is 600 by 541 by 500 mm. This portion is partially within the current ISIM truss design volume.

Cold-side temperature The optics, except for the detectors, should be 70 K or colder. The detectors should be colder than 32 K.

Optical alignment to the ISIM The ISIM can maintain ISIM–to–MOS optical alignment on the order of 10th's of a millimeter.

Focal surface flatness at microshutter Sufficient to obviate need for a 3 mirror Offner relay before the microshutter.

Data Rate After co-adding, the MOS data rate will be about 32 kilobytes per second.

2 Technical Description

2.1 Optical

The 7.5 x 3.75 arcminute field of view is larger than the OTA was designed for, so the OTA Tertiary and Fast Steering Mirrors were enlarged(see figure 1). A pickoff mirror is inserted in the converging f/24 beam to divert light sideways to the micro shutter array. The array selects portions of the field to transmit to the spectrometer section, with a plate scale of 0.107 arcseconds per 100 micron shutter aperture. The OTA focal surface is curved so that individual 512 x 512 segments of the micro shutter array are staggered in focus to match the local field. The diverging chief rays from such a large field of view make a BaF2 or MgF2 field lens necessary, although the pickoff and fold mirrors might be used for this instead. A fold mirror directs the light forward again, toward a collimating mirror. This mirror will probably be a toroid or off-axis asphere in the final design. The spectral selection elements come next, at a pupil in the collimated beam. Filters for the gratings would be placed here too, used in double pass. Finally a two element camera relays the beam to the detector array. The camera elements have not been optimized either, but will probably be toroids

or off-axis aspheres also. The camera maps the 0.107 arcsecond shutters onto 28 micron detector pixels.

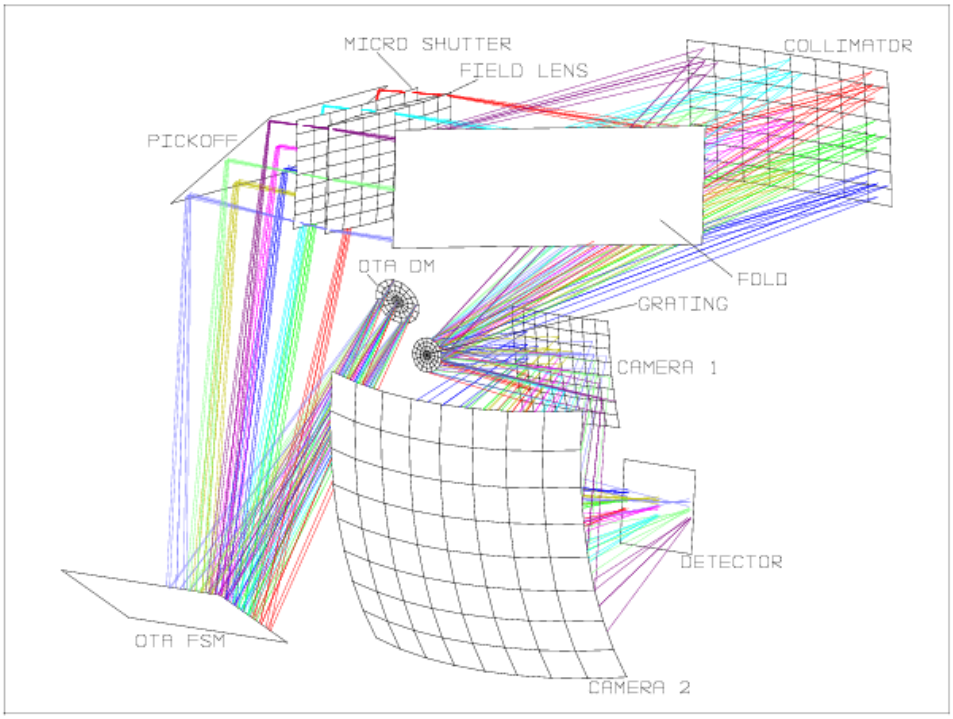

Figure 1:
MOS instrument optical layout and ray trace diagram.

2.2 Packaging

The MOS instrument consists of several optical elements and two mechanisms: the micro-shutter array and the grating wheel mechanism. The components are mounted on a large primary optical bench or a small secondary bench(see figure 2). The instrument structure and component mounts are made of aluminum to provide uniform properties consistent with the aluminum optics. Light from the ISIM fast steering mirror is directed to a fold mirror at the MOS entrance. This mirror, the micro-shutter array, and a field lens are mounted on the secondary optical bench. The other components are mounted on the primary optical bench. The grating wheel mechanism consists of

a Geneva mechanism driven by a stepper motor. The MOS is mounted to the side of the ISIM cage structure. ISIM must make some accommodation for the MOS secondary optical bench (see figure 3).

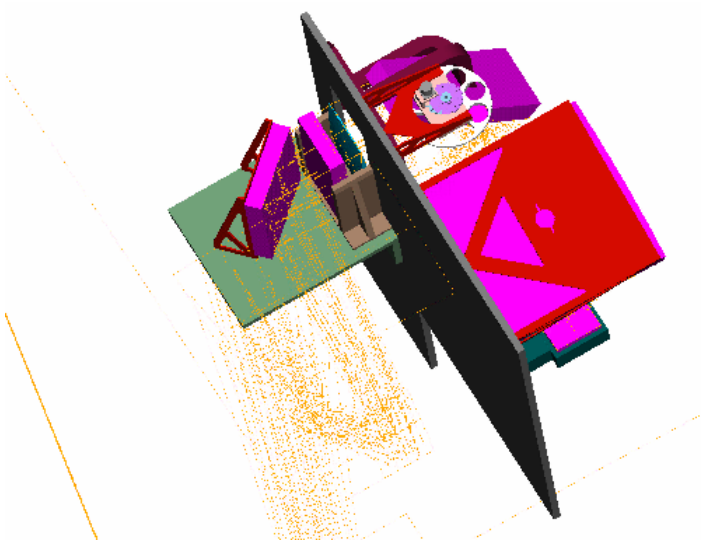

Figure 2:
Mechanical packaging of the transmissive microshutter MOS instrument.

2.3 Thermal

The goal of the NIR MOS thermal design is to yield the lowest possible cryogenic temperatures on the MOS detector and optical bench. In addition, this thermal design provides isolation in order to minimize its impact on the relatively isothermal environment of the ISIM. The thermal design will utilize entirely passive cooling techniques.

The MOS detector will be mounted to the MOS optical bench using low conductance mounts (ULTEM-1000) and the detector will be isolated from radiative heat transfer through the use of thermal blankets. Cooling of the detector will be achieved through a copper thermal strap connecting the detector to the ISIM detector radiator. Thermal analyses of the Yardstick ISIM have revealed that cooling to 30-32K is readily achievable using a small thermal strap ($<$1kg).

The MOS optical bench will be attached to the ISIM optical bench truss structure through the use of low conductance mounts. These mounts serve to restrict the flow of heat from the ISIM through the MOS optical bench to the detector. They also serve to ensure more uniform temperature distribution on the optical bench. Thermal analyses of the Yardstick ISIM indicate that the temperature gradient for both an Aluminum and Gamma-Alumina bench is negligible ($<$ 1K).

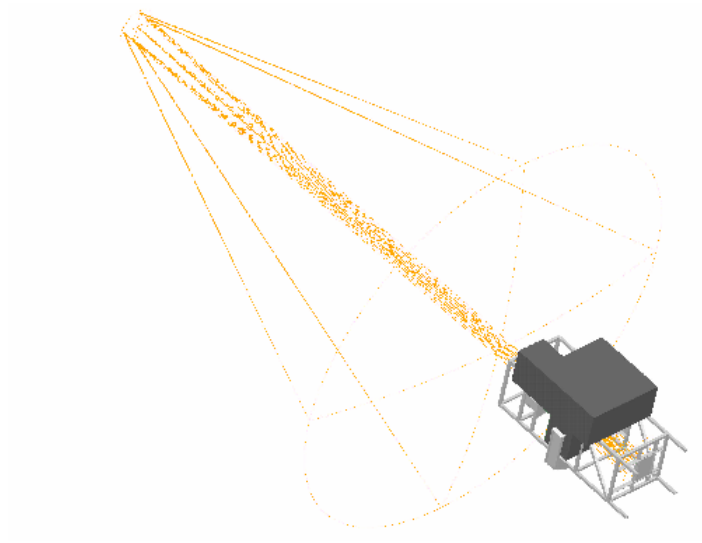

Figure 3:
The transmissive microshutter MOS instrument attached to the NGST ISIM.

All warm electronics (data processing, housekeeping, etc.) will be isolated from the cryogenic environment of the ISIM by placing these items on the sun-side of the NGST sunshield. Heat arising from conductive transport along the harnessing from the electronics to the mechanisms and detector of the MOS will be drawn off along its path in the same manner as other ISIM harnesses.

2.4 Electronics

The MOS electronics is composed of five electronics cards, approximately 6 x 8.25 inches ,that are housed in a electronics box located on the warm side of the ISIM. As shown in figure 4, the MOS electronics consists of a card for controlling the microshutter, a card for controlling the aperture wheel, a card for collecting housekeeping data, a card for interfacing to the NGST and providing additional image memory, and a card containing a data processor. The latter two cards are required to support autonomous operation of the instrument. A cabling harness containing approximately 120 signals provides the interfaces necessary for controlling the microshutter ($\sim$ 27), controlling the aperture wheel ($\sim$ 8), and collecting data from the remote temperature sensors ($\sim$ 80). Although unknown at the present, the cabling harness may consist of flexible flat cables containing copper wires laminated between layers of Kapton, with gold or copper metal vacuum deposited on the surface. The cross sectional area of the cables will be very small, minimizing thermal conductivity without overly restricting electrical conductivity. An additional benefit of this approach is that where needed, controlled impedances may be provided.

This estimate includes the electrical GSE. It is assumed that the GSE would provide the MOS instrument with:

- limited data processing functions,
- access to its collected images,
- an undesignated number (TBD) of card slots accessible over either a PCI or other high speed peripheral bus,
- regulated power.

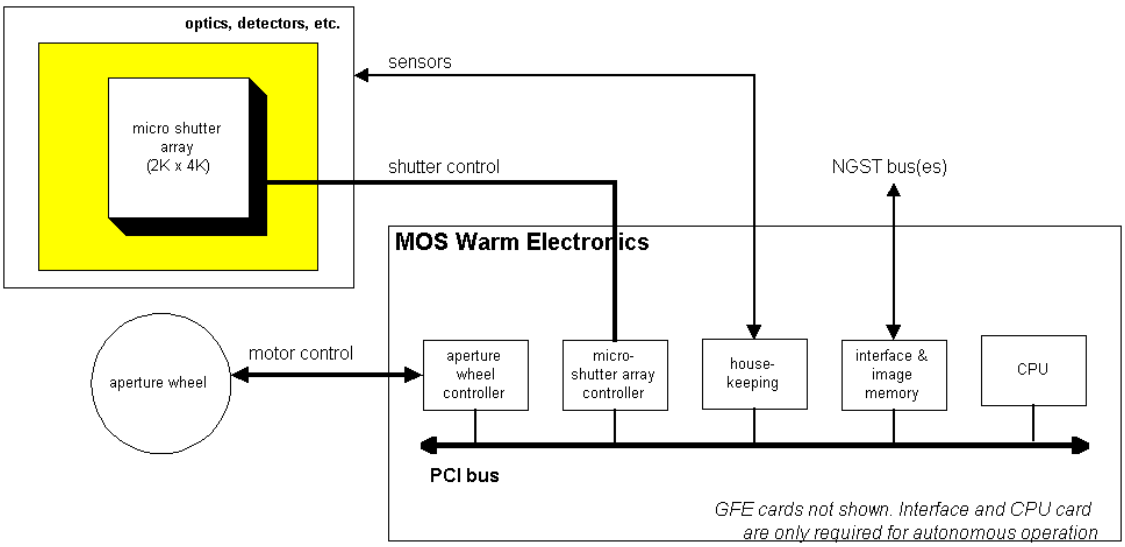

Figure 4:
Electronics block diagram.

2.5 Software

Software development for this instrument includes the on-board embedded software, NGST C&DH based software, and the ground software for controlling the MOS. On-board data processing from MOS, as well as for the other instruments, should be primarily a matter of reading the detectors, co-adding the data, and flagging bad data due to detector cosmic ray impacts. We would levy requirements on the NGST provided detector sub-system to ensure our needs are met. The MOS specific software would control the mechanisms and heaters, monitor the instrument, and provide autonomous target selection for the MOS based upon known algorithms. An algorithm similar to the autonomous target selection algorithm running on a SUN($\sim$ 3 GHz) workstation processes 300 objects in 3 seconds. A 1 GHz machine should be able to process 20,000 targets in 70 seconds. About 16 MBytes is required to store the image plus workings space in memory and program store.

2.6 Integration and Test

To minimize risk, we plan to emphasize cryogenic test and characterization of critical components well before system integration. The instrument optical design has been designed so that alignment tolerances are readily achievable. We will provide a ground system for test, but expect the NGST project will provide an interface simulator and appropriate templates for verification.

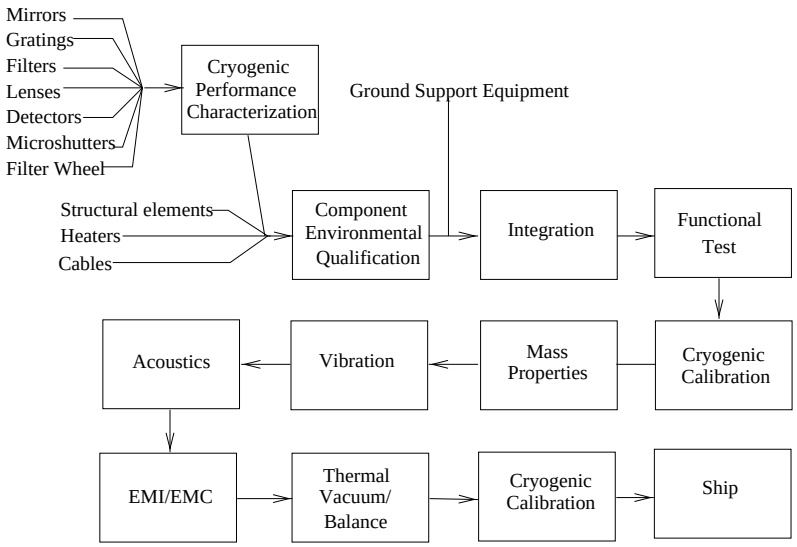

Figure 5:
Flight qualification of a MOS instrument.

2.7 High Spectral Resolution with High Sensitivity

The highest possible sensitivity over the .6 to 5 μm range with $R \sim 3000 - 5000$ can be provided by cross–dispersing an echelle via a prism.

The higher resolving power mode, $R \sim 3000 - 5000$, was described in the September report as a choice between an echelle cross-dispersed by a Fourier Transform Spectrometer and several ($\sim$ 11) gratings to cover the 0.6-5 μm spectral range. Instead, we are now baselining an echelle cross-dispersed by a prism.

Cross-dispersing with a prism covers the whole spectral range in one observation, unlike separate first order gratings, and so is $\sim$11 times faster, and is more sensitive than the FTS cross-disperser by avoiding increased readout noise from the many readouts of the FTS steps required for these higher orders (4 - 30). It is also much simpler to implement and integrate with the lower resolution modes, with the echelle and prism occupying only one position on the grating wheel, compared to 11 positions for the gratings and an entirely different optical path for the FTS. However, because of the larger footprint of the echelle spectrum on the detector we will be able to look

at many times fewer objects at once, only 15 - 30. This is why we dropped this method for the lower resolution. We consider optimal sensitivity for fewer objects to be the preferred trade in the case of the fewer brighter objects to be observed at higher resolution.

For point sources the standard 2×2 or 2×3 apertures would be opened. For extended sources, slits could be opened in rows and scanned sequentially, or Hadamard transforms used as in the next section.

2.8 Multiplex Imaging Using the Microshutters

Efficient full field or multiple subarray imaging can be provided by encoding multiple objects with the microshutter array mask using Hadamard patterns. This is most sensitive when detector dark noise limited. Shutters may be opened until the background limit is reached, without loss of sensitivity.

For $R \sim 1500$, the whole field may be observed to search for faint emission line objects with weak continua, as might be expected at the very highest redshifts, with similar performance to an IFTS, but without interferometric optics. This could also be used to resolve the two-dimensional structure of extended objects, similar to an IFS, but with selectable spectral resolving power, spatially and spectrally well matched to faint extended galaxies.

For $R \sim 3000 - 5000$, many more than the 15-30 objects, and structure within extended objects could be observed, using the Hadamard transforms to allow overlapping echelle format footprints.

3 Cost Estimate

3.1 Schedule

Our schedule is based upon the most current program milestones found at `http://ngst.gsfc.nasa.gov` for the ISIM, as summarized in table 1. For simplicity, we assumed that phase A//B begins at instrument selection, phase C//D begins at CDR and ends 1 month after Launch. Details about the work performed during each phase may found under section 3.3 below.

3.2 Cost Summary

A grassroots cost estimate(assuming full cost accounting) was developed by the ISAL Team, and the RAO office produced an independent cost estimate based upon historical precedent(see table 2). The detectors and detector electronics(detector sub-system) were not costed in the grassroots estimate because the NGST project will provide them. The NGST project estimates the value of the detector sub-system to be greater than 6M$. The RAO cost estimate includes the cost of the detector sub-system. The development costs for the transmissive microshutter up through development of a 2048×2048 demonstration shutter were not included in this grassroots estimate. Development of full size, flight qualified transmissive microshutter and spare is estimated to cost 6M$; this is

Milestone	**Date**
Instrument Selection	February 2002
Preliminary Design Review(PDR)	December 2002
Critical Design Review(CDR)	December 2003
Instrument Delivery	December 2005
Start ISIM Integration	March 2006
Launch	February 2008

Table 1:
Milestones for planning and costing a transmissive microshutter based MOS spectrograph.

included in this cost estimate. The grassroots estimate assumes a successful technology development program prior to the start of phase A/B, providing a TRL of 5.25 at that point(see original report, table 2.3).

		With 25 % Contingency	
Estimation Method	**No Contingency**	**With Detector SS**	**Without Detector SS**
Grassroots	23,130		28,912
RAO (TRL=3.25)	32,700 - 40,900	40,900 - 51,200	34,900 - 45,200
RAO (TRL=5.75)	28,500 - 35,600	35,600 - 44,500	29,600 - 38,500

Table 2:
Estimated total costs, grassroots and RAO, for a spectrograph of 173 kgs, 10 Watts power, 32 Kbytes per sec data rate

The RAO office suggests that the cost of technology development of the MOS can be estimated by subtracting the estimate for a TRL of 3.25 from the estimate for a TRL of 5.25. Using this approach, the technology development costs for the MOS is between 3.9 and 4.8 M$.

Table 3 contains the MOS instrument development costs from the grassroots distributed by phase, without contingency, where phase A/B is assumed to begin right after instrument selection and phase C/D is assumed to begin right after CDR. Figure 6 contains the manpower distribution by month from the grassroots, and figure 7 contains the expected burn rate by month.

3.3 Details

The following sections contain details of the grassroots cost estimate.

WBS	<A			A/B			C/D		
	CS	Cont	Mat.	CS	Cont	Mat.	CS	Cont	Mat.
	K$	*K$*	*K$*	*K$*	*K$*	*K$*	*K$*	*K$*	*K$*
1.0 Management	82.7	0.0	0.0	265.3	110.2	20.0	396.5	179.1	20.0
2.0 Science program development	132.3	130.6	9.0	509.1	653.6	28.0	1378.3	2102.8	52.0
3.0 Systems Engineering	23.2	26.1	0.0	303.0	166.4	57.0	568.7	134.3	138.1
4.0 SR&QA	23.2	24.2	0.0	185.1	126.6	37.0	235.0	204.6	36.0
5.0 Structure	39.3	0.0	0.0	1204.2	354.4	950.0	1556.5	432.3	600.0
6.0 Optics	23.2	26.1	0.0	215.9	40.0	104.0	284.4	36.7	4268.0
7.0 Electronics	23.2	28.9	0.0	124.0	315.8	116.0	811.5	671.9	554.0
8.0 Thermal Engineering	21.0	0.0	0.0	172.7	0.0	303.8	253.3	0.0	101.2
9.0 Software	23.2	7.8	0.0	275.1	46.1	221.0	443.1	97.7	25.0
10.0 Detectors	0.0	0.0	0.0	0.0	0.0	0.0	0.0	0.0	0.0
Sub−total	391.6	243.6	9.0	3254.4	1813.1	1836.8	5927.4	3859.4	5794.4

Table 3:
MOS instrument development costs without contingency distributed by phase.

3.3.1 Management

The management team is lean, with a full time Instrument Manager, a part-time deputy Instrument Manager, a part-time scheduler and part time administrative support.

3.3.2 Science Program Development

The science team costs are estimated using instrument Co-I team members to co-ordinate key instrument characteristics and functions such as the microshutter array, detector array, optics, calibration, operations and data reduction, and ensure that they work together to satisfy the scientific requirements. They will define scientific requirements for the system and subsystems, ensure any necessary technology developments are done, ensure design trades maintain necessary performance but avoid over design, and provide continuity through design, fabrication, test, calibration, and on-orbit operations.

3.3.3 Systems Engineering

A classical systems engineering approach is assumed, with a full time Instrument System Engineer, and a full time Integration and Test Manager starting shortly before CDR. Part time analytical support is included through phase A/B, and part time administrative support throughout. The costs for operating the environmental test chambers and test cells is included under this line.

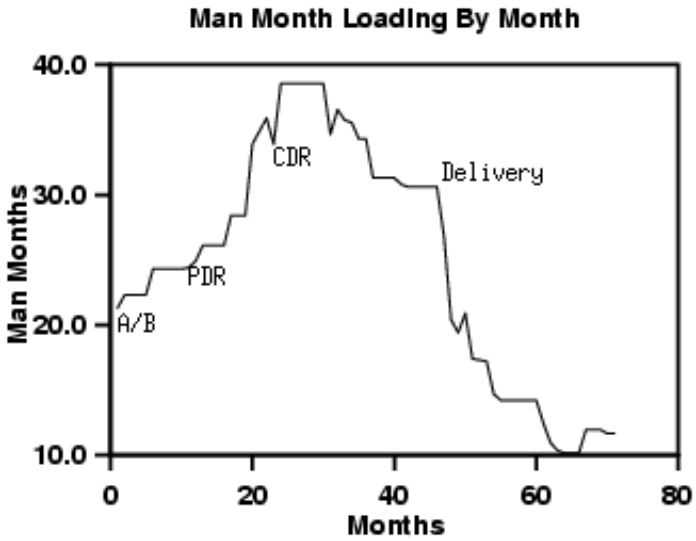

Figure 6:
Estimated labor distribution without contingency for the transmissive microshutter based MOS instrument development model.

3.3.4 SR&QA

A full time quality assurance engineer is assumed and a part time contract parts engineer. Part time administrative support is assumed throughout. Budget for radiation testing and other parts tests is included.

3.3.5 Structure

Labor for engineering, mechanical design, integration, assembly and alignment are under this line. Materials and fabrication and structure are included as well as 2 CAD stations.

3.3.6 Optics

Labor for engineering analysis, design, optical metrology and fabrication are included under this line. All optical elements, including the flight qualified microshutter are under this line; a flight unit and a spare are assumed for each optical element.

3.3.7 Electronics

Labor for the design, parts, fabrication, integration and verification of the electronics are included under this line. The electronic ground support equipment is included under this line. Three full

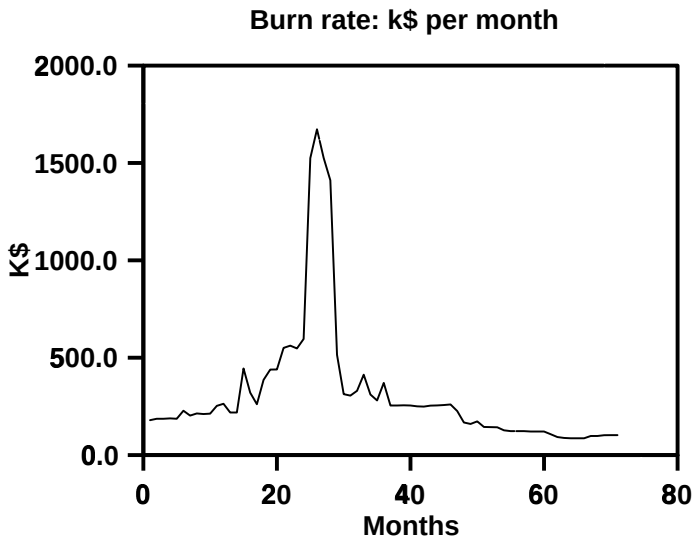

Figure 7:
Estimated burn rate without contingency for the transmissive microshutter based MOS instrument. The large peak is for funding sub-system procurements to maintain optimal schedule.

time test conductors are assumed to support instrument system level integration and test are under this line. Flight and test cables are costed under this line.

3.3.8 Thermal Engineering

Labor for the design, analysis, parts, fabrication and test of the thermal control is included under this line. Support for thermal balance testing is included under this line

3.3.9 Software

Labor for the development of the on-board embedded software, NGST C &DH resident software, and ground test and control software under this line. A classical software documentation approach is assumed.

3.3.10 Detectors

The detector sub-system will be provided by the HGST project. Integration costs for the detector sub-system are included under Optics and Electronics.